VFU50SFR

Sink material	Stainless steel
Type	Monoblock bowl
No. of bowls	1
EAN code	8017709304669

Aesthetics

Aesthetic	Universale	**Building in type**	Flush fitted, Flat, Undermount
Series	Mira	**Logo**	Embossed
Colour	Stainless steel	**Tap hole / precut tap hole**	No Taphole
Finishing	Brushed		

	Bowl type	Bowl dimensions, WxDxH (mm)	Bowl depth (mm)	Radius corner bowl	Overflow	Strainer position	Strainer dimension
Bowl	Minimum radius	500 x 400 x 200	200	15	Yes, flush fitted	Wall position	3.5"

Technical Features

Dimensions of the product (mm)	200x540x440 mm
Cutout dimension topmount (mm)	525*425 mm
Cutout dimension undermount (mm)	504*404 mm
Undermount cutout radius	17 mm
Height from kitchen top	1 mm
Base unit size	60 cm
No. of clips	8
Type of clips	Standard + undermount clip

Accessories Included

Accessories for installation	Strainer, Savespace siphon with dishwasher outlet connection, Fixing clips, Silicone

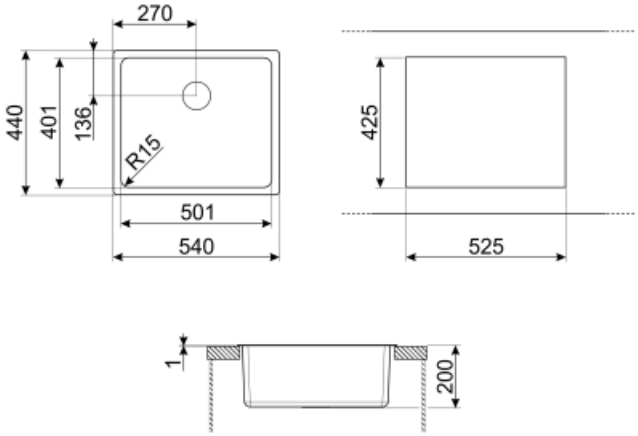

Not included accessories

RND1V

Rondò waste kit 1 bowl with standard overflow

DB34

St/steel drain basket to fit STD radius 340 x 400 bowl, 180 mm depth

KITFD100

Waste disposal 1 HP, Motor: 1/2 horsepower, Fits all sinks with 3 1/2" waste outlet

3713

Siphon double bowls sinks (dishwasher connection included)

COL19

St/Steel colander to fit MINIMUM radius mm bowl, measures 200 x 410 x 26 mm

KITDSQ

Soap dispenser chrome finishing with square knob 40x40 mm

KITFD075

Waste disposal 0,75 HP, Motor: 1/2 horsepower, Fits all sinks with 3 1/2" waste outlet

KITFD050

Waste disposal 0,5 HP, Motor: 1/2 horsepower, Fits all sinks with 3 1/2" waste outlet

COL36

St/steel colander for MINIMUM radius bowls, measures 370 x 410 x 30 mm

3712

Siphon single bowl sinks (dishwasher connection included)

COL19H

St/Steel colander to fit MINIMUM radius mm bowl, measures 200 x 410 x 100 mm

KITDS

Soap dispenser chrome finishing with round knob

CB25MN

Single HPE chopping board to fit minimum radius bowls, black matt, measures 250 x 410 H 12 mm, dishwasher safe

Symbols glossary (TT)

Cupboard width required for sink installation

Sink depth - depending on the model, the depth can be from13 to 24,5

Flat: Installation of productwith flat edge.

Flush-fitted installation: Models of sinks/hobs which are integrated flush with the tabletop of a kitchen unit.

Under table top installation: The sink is fixed under tabletop, which extends the work surface and the depth of the sink.